79 Series - Small Piston Vacuum Pump

Model:BD-79V-M 35L

Pneumatic Data	
Maximum Vacuum (Negative Pressure)	-85 kPa (-638mmHg/-0.0850Mpa)
Maximum Flow(@0 kPa)	35L/min
Electrical Data	
Motor Type	DC Brush Motor
Rated Voltage	**12V DC**
No-load Current	3A
Noise From 30cm	65 dB
Working Mode	Intermittent
Life Time	1000 hours
Other Data	
Inlet/Outlet Diameter	Φ8.5 mm/Φ4.0 mm
Dimensions	123.5x103.5x56 mm
Weight	800 g
Pump Material	Aluminium alloy/PPS
Diaphragm And Valve Material	High temperature-high pressure resistance
Operating Environment Temperature	5-45℃



Features

- Miniature piston air vacuum pump, small size , maintenance-free
- Precise production, oilless, high flow, high vacuum
- Brush motor, operation life of more than 1000 hours.

Dimensional Outline Drawing （Unit:mm）

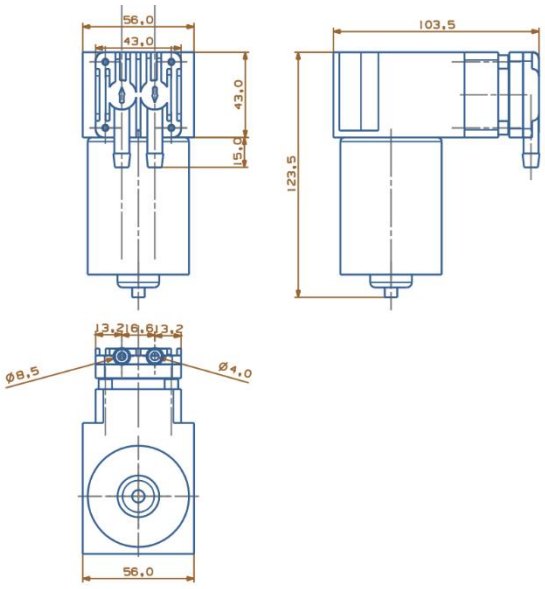

Accessories Optional

Check Valve, Filter, Muffler



Usage and Attention

1.Red point or red wire on motor marked as Positive pole; Black wire on motor marked as negative pole.

2.Expected lifetime: approx 1000 hours with continuous running under condition of rated voltage and normal temperature (25℃), it is recommended to work continuously for no more than 0-5 minutes each time.

3. Please do not exceed the maximum specifications required , Otherwise we don't guarantee the product.

4. This product does not guarantee lifetime and defective products due to get into of dust, water droplets, bugs.

5. Impurities in prohibited from entering the motor and water droplets, In order to avoid to cause product performance unstable and damage products.

79 Series - Small Piston Vacuum Pump

Model:BD-79V-M 40L

Pneumatic Data	
Maximum Vacuum (Negative Pressure)	-85 kPa (-638mmHg/-0.0850Mpa)
Maximum Flow(@0 kPa)	40L/min
Electrical Data	
Motor Type	DC Brush Motor
Rated Voltage	**12V DC**
No-load Current	3A
Noise From 30cm	65 dB
Working Mode	Intermittent
Life Time	1000 hours
Other Data	
Inlet/Outlet Diameter	Φ8.5 mm/Φ4.0 mm
Dimensions	123.5x103.5x56 mm
Weight	800 g
Pump Material	Aluminium alloy/PPS
Diaphragm And Valve Material	High temperature-high pressure resistance
Operating Environment Temperature	5-45℃



Features

- Miniature piston air vacuum pump, small size , maintenance-free
- Precise production, oilless, high flow, high vacuum
- Brush motor, operation life of more than 1000 hours.

Dimensional Outline Drawing （Unit:mm）

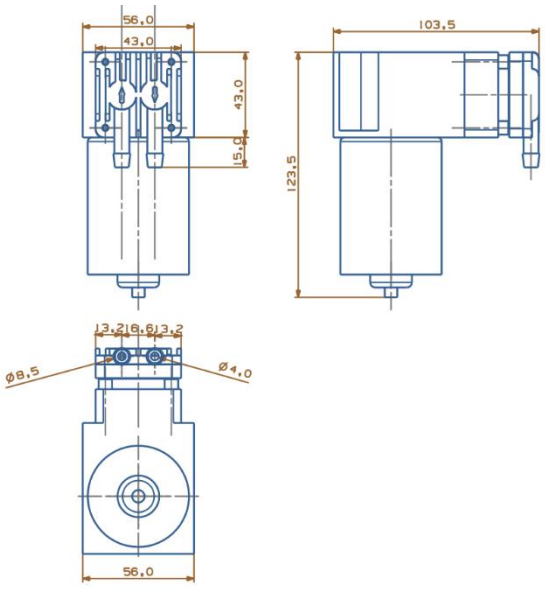

Accessories Optional

Check Valve, Filter, Muffler



Usage and Attention

1.Red point or red wire on motor marked as Positive pole; Black wire on motor marked as negative pole.

2.Expected lifetime: approx 1000 hours with continuous running under condition of rated voltage and normal temperature (25℃), it is recommended to work continuously for no more than 0-5 minutes each time.

3. Please do not exceed the maximum specifications required , Otherwise we don't guarantee the product.

4. This product does not guarantee lifetime and defective products due to get into of dust, water droplets, bugs.

5. Impurities in prohibited from entering the motor and water droplets, In order to avoid to cause product performance unstable and damage products.

79 Series - Small Piston Vacuum Pump

Model:BD-79V-M 45L

Pneumatic Data	
Maximum Vacuum (Negative Pressure)	-85 kPa (-638mmHg/-0.0850Mpa)
Maximum Flow(@0 kPa)	45L/min
Electrical Data	
Motor Type	DC Brush Motor
Rated Voltage	**12V DC**
No-load Current	3A
Noise From 30cm	65 dB
Working Mode	Intermittent
Life Time	1000 hours
Other Data	
Inlet/Outlet Diameter	Φ8.5 mm/Φ4.0 mm
Dimensions	123.5x103.5x56 mm
Weight	800 g
Pump Material	Aluminium alloy/PPS
Diaphragm And Valve Material	High temperature-high pressure resistance
Operating Environment Temperature	5-45℃



Features

- Miniature piston air vacuum pump, small size , maintenance-free
- Precise production, oilless, high flow, high vacuum
- Brush motor, operation life of more than 1000 hours.

Dimensional Outline Drawing （Unit:mm）

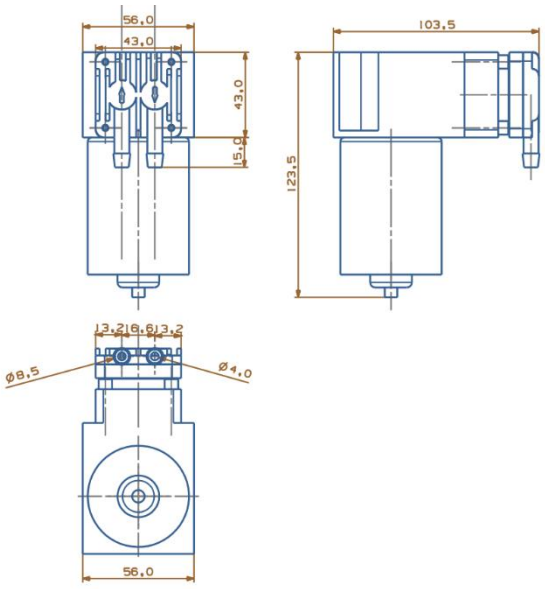

Accessories Optional

Check Valve, Filter, Muffler



Usage and Attention

1.Red point or red wire on motor marked as Positive pole; Black wire on motor marked as negative pole.

2.Expected lifetime: approx 1000 hours with continuous running under condition of rated voltage and normal temperature (25℃), it is recommended to work continuously for no more than 0-5 minutes each time.

3. Please do not exceed the maximum specifications required , Otherwise we don't guarantee the product.

4. This product does not guarantee lifetime and defective products due to get into of dust, water droplets, bugs.

5. Impurities in prohibited from entering the motor and water droplets, In order to avoid to cause product performance unstable and damage products.